Cut-Out

Watherm CNW

CNW 5-10-15 INTERNO

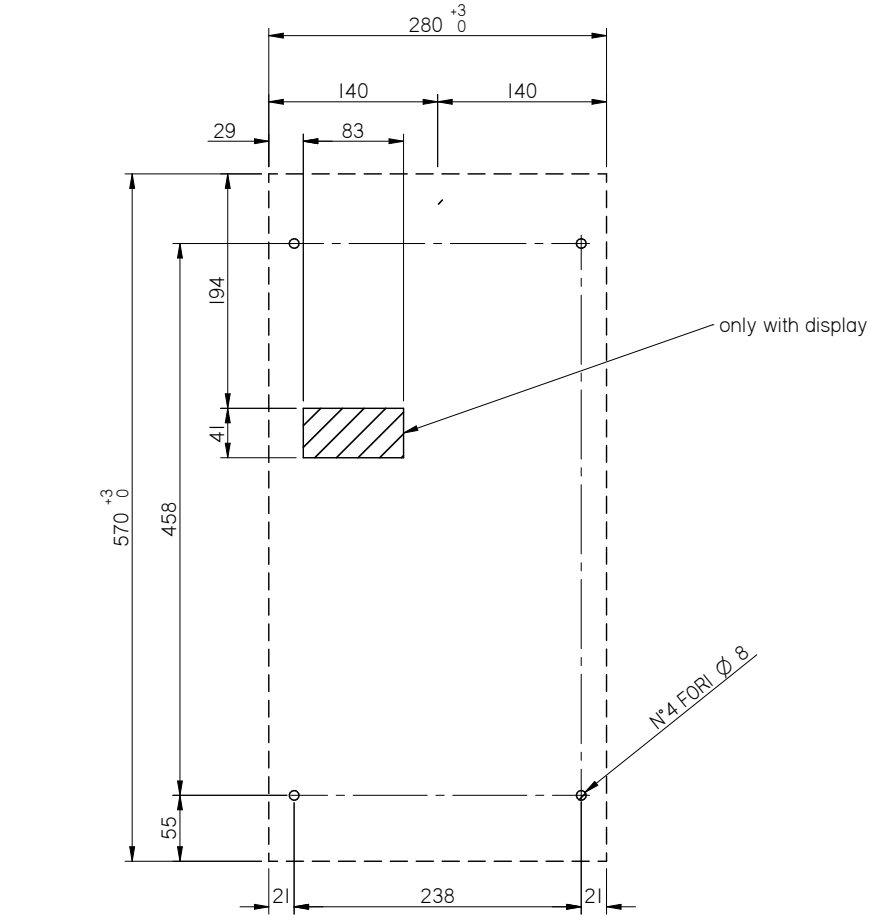

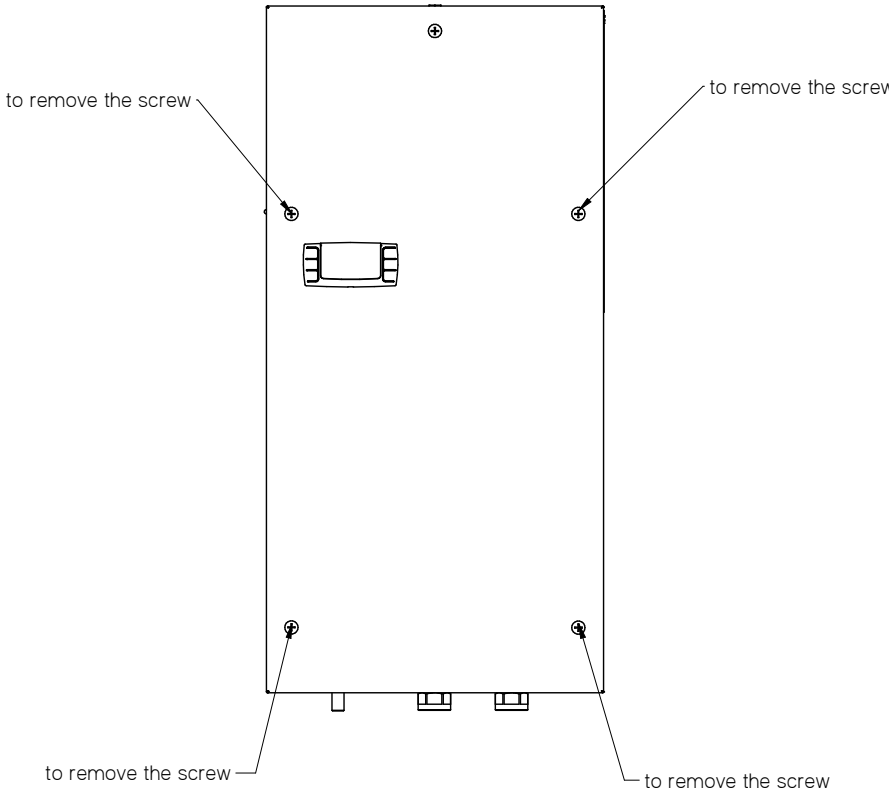

Cut-Out

Watherm CNW

CNW 5-10-15 ESTERNO

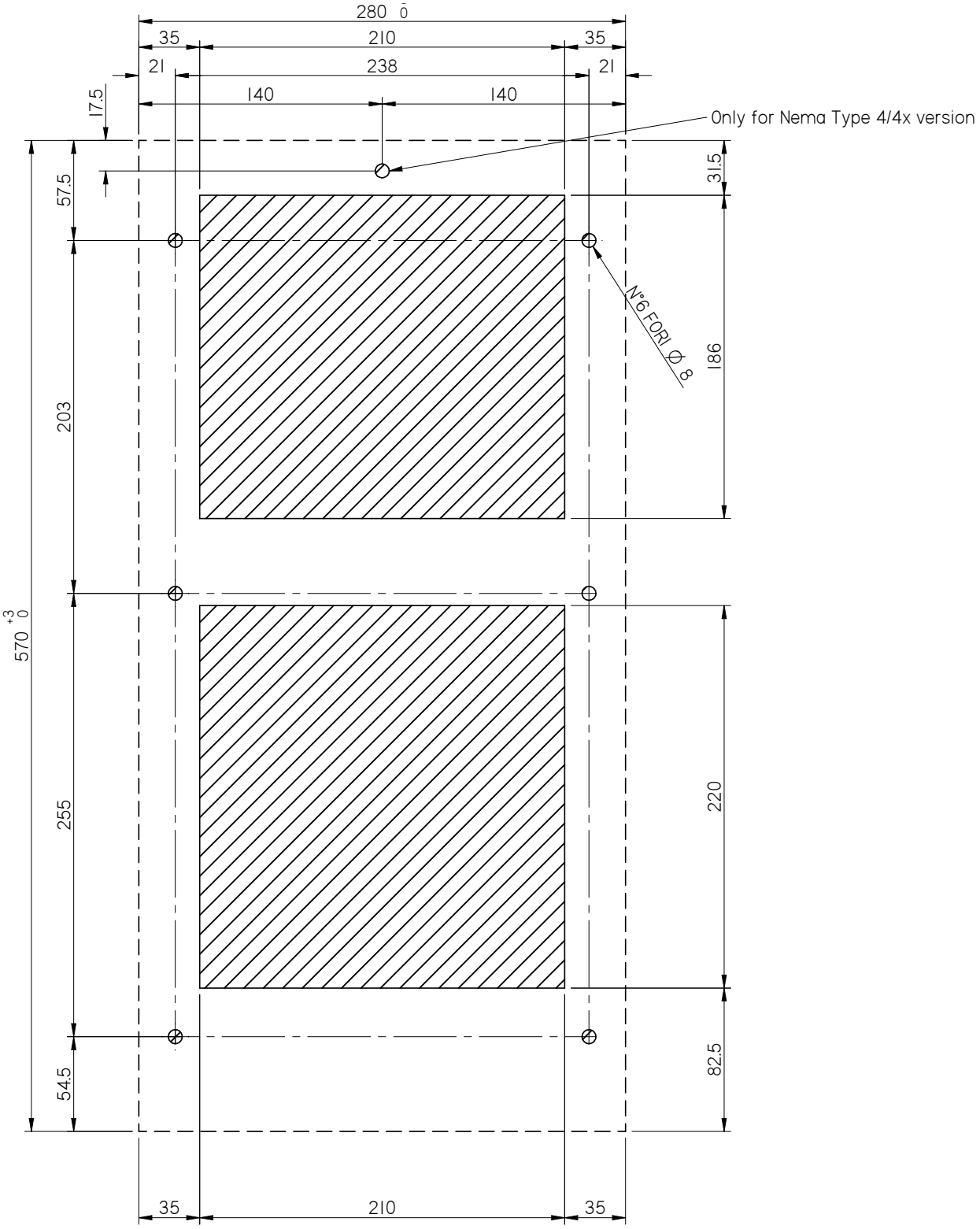

Cut-Out

Watherm CNW

CNW 30 INTERNO

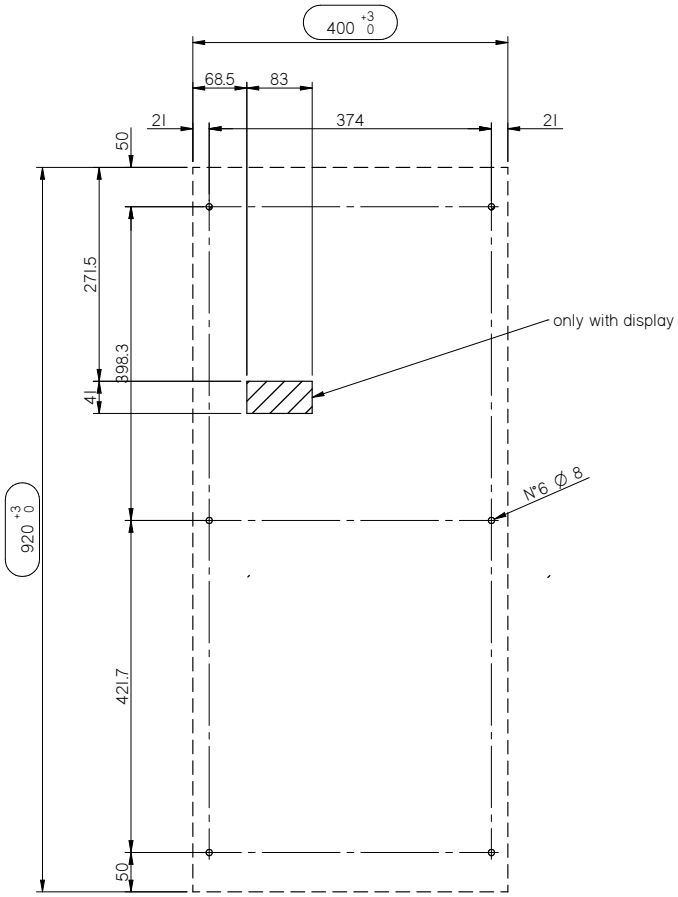

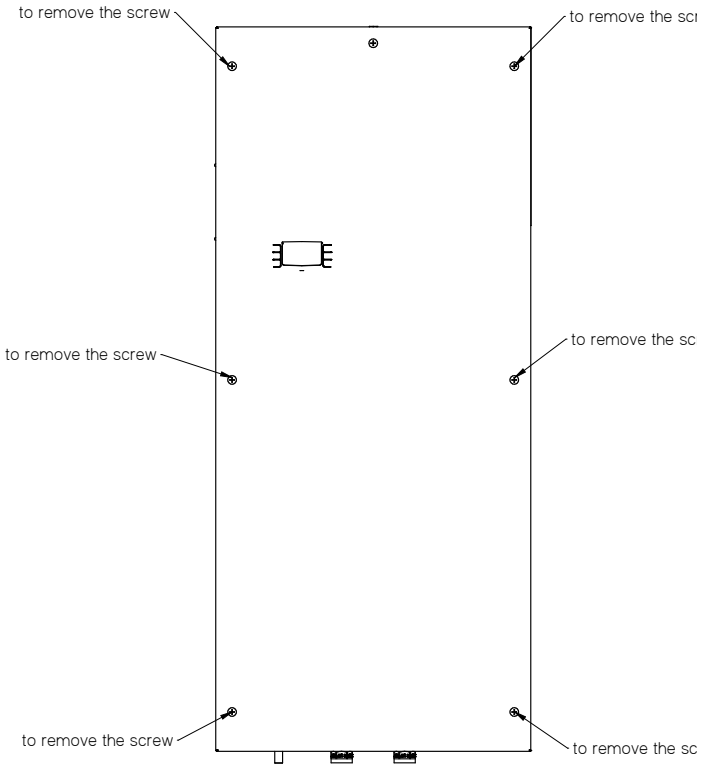

Cut-Out

Watherm CNW

CNW 30 ESTERNO

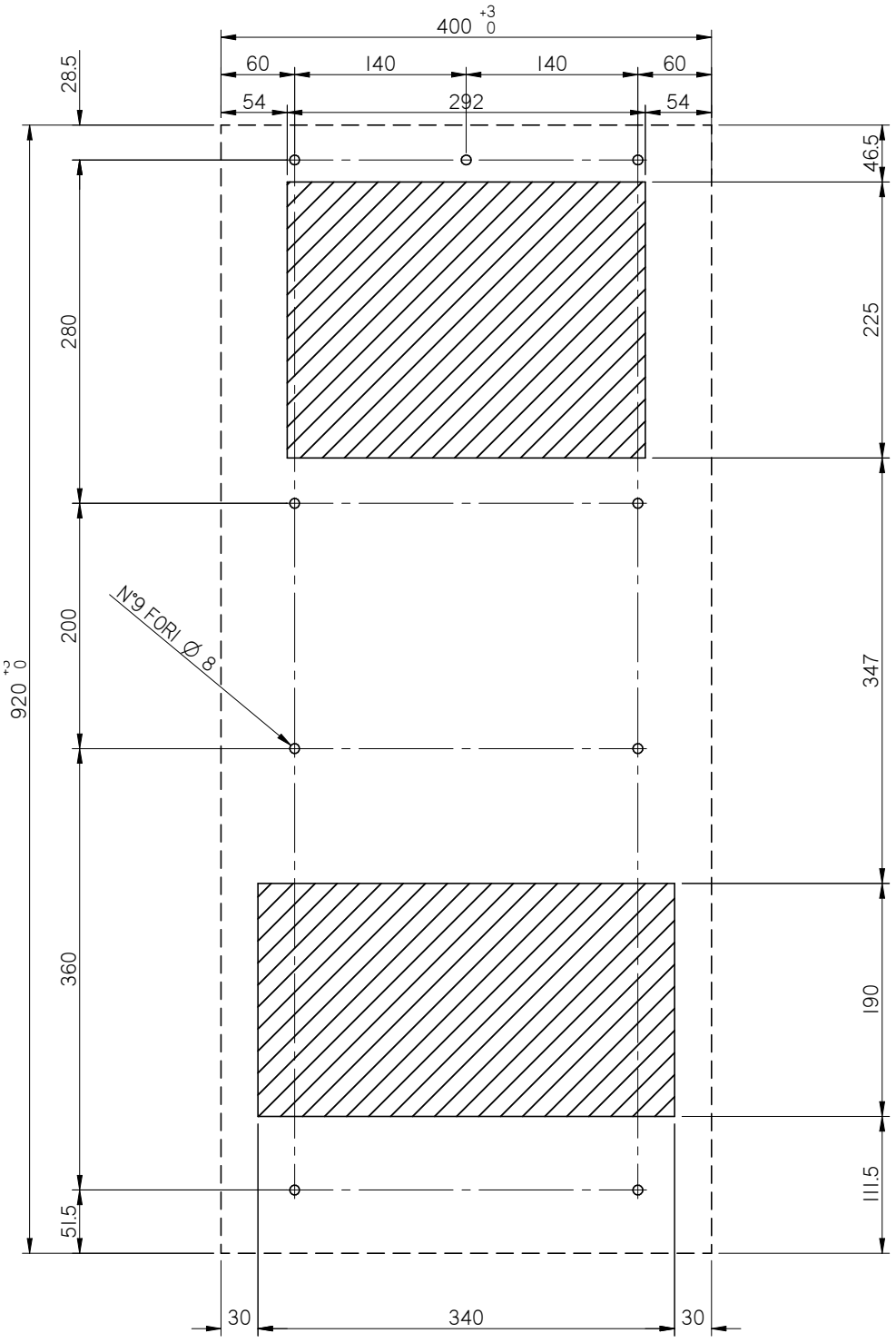

Cut-Out

Watherm CNW

CNW 50 INTERNO

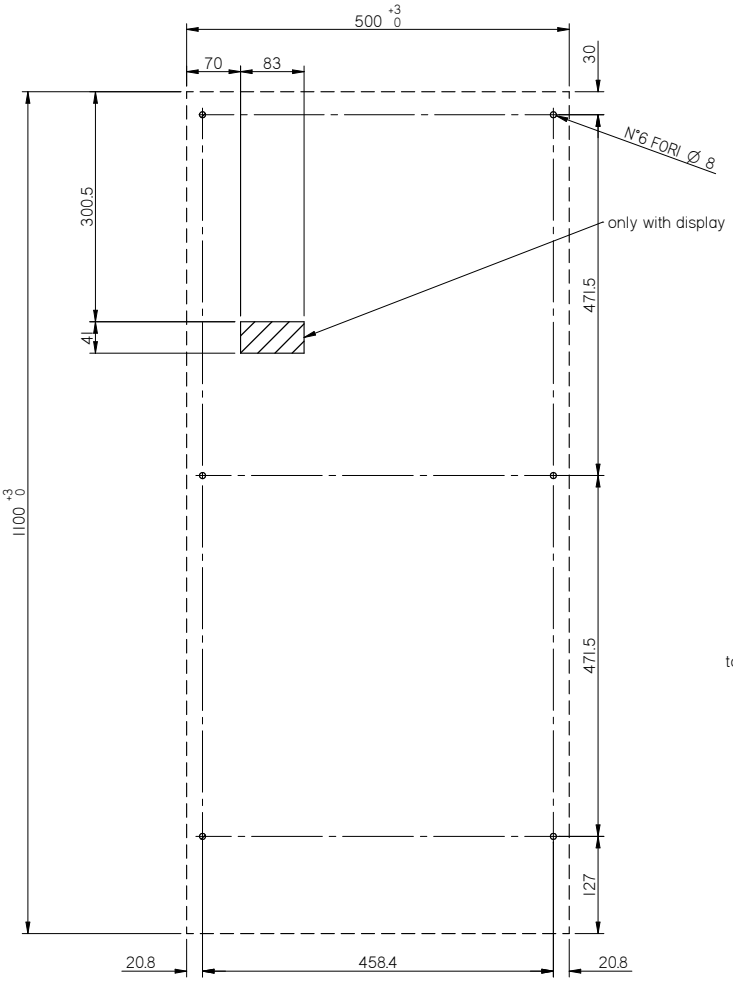

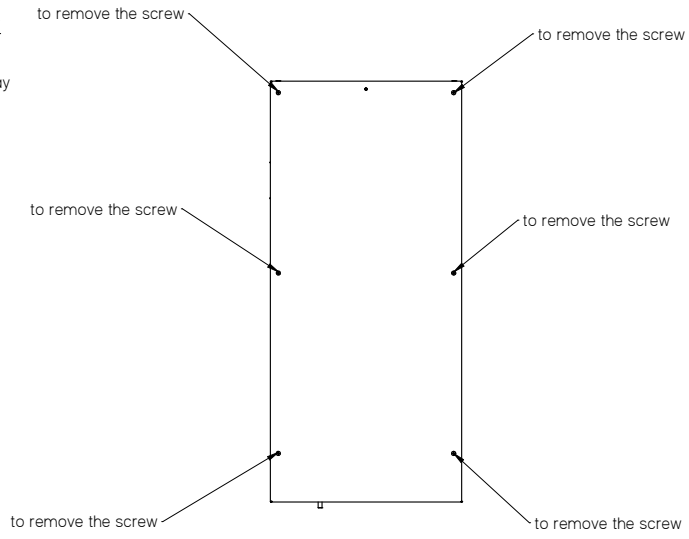

Cut-Out

Watherm CNW

CNW 50 ESTERNO

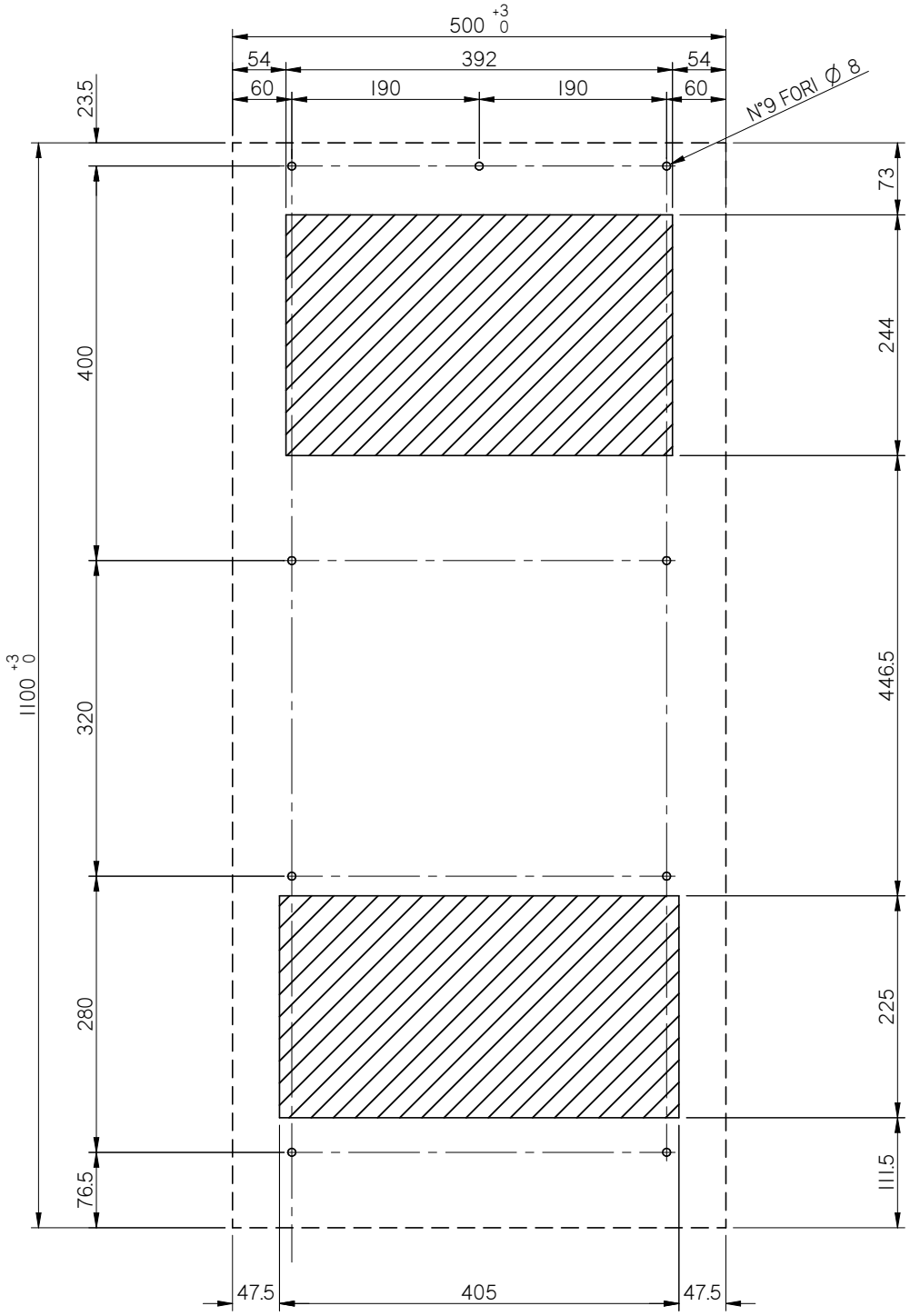

Cut-Out

Watherm CNW

CNW A5-B5 INTERNO

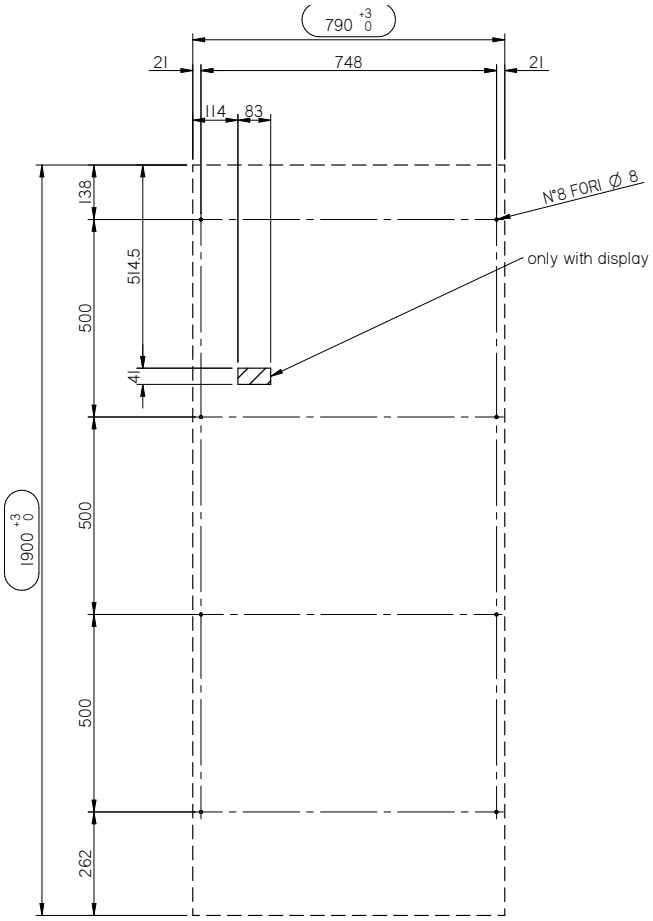

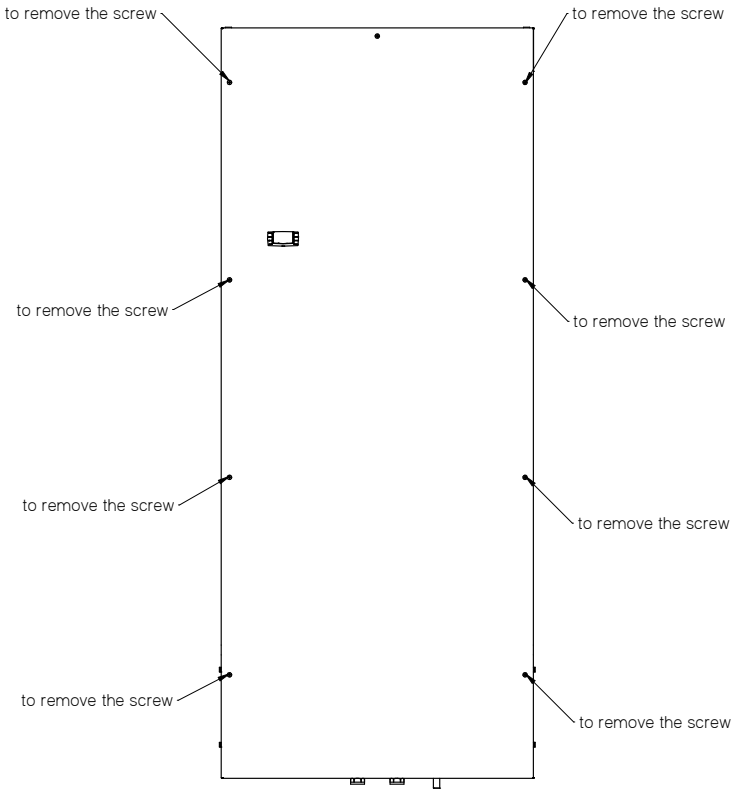

Cut-Out

Watherm CNW

CNW A5-B5 ESTERNO

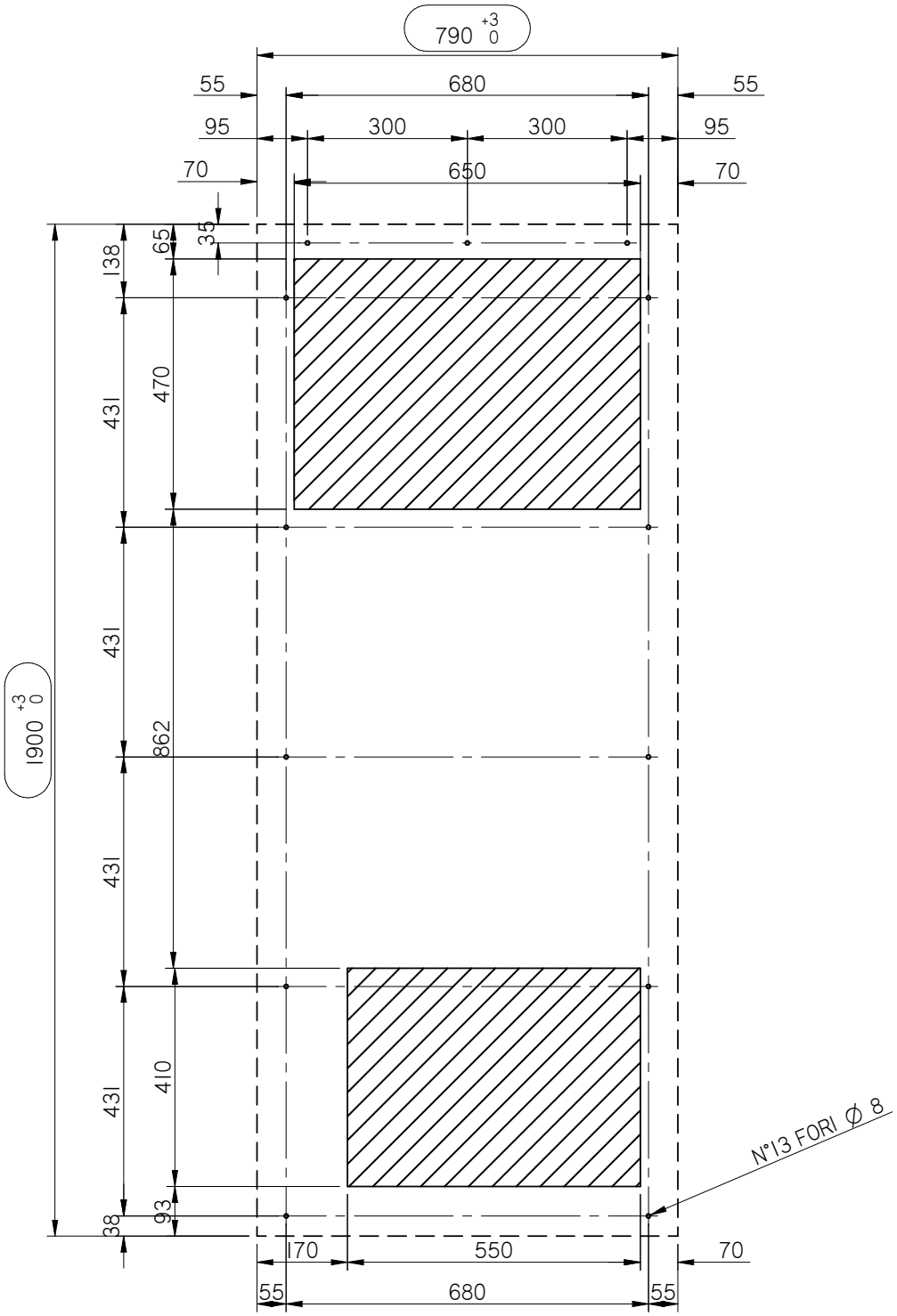

Cut-Out

Watherm CNW

CNW A0 INTERNO

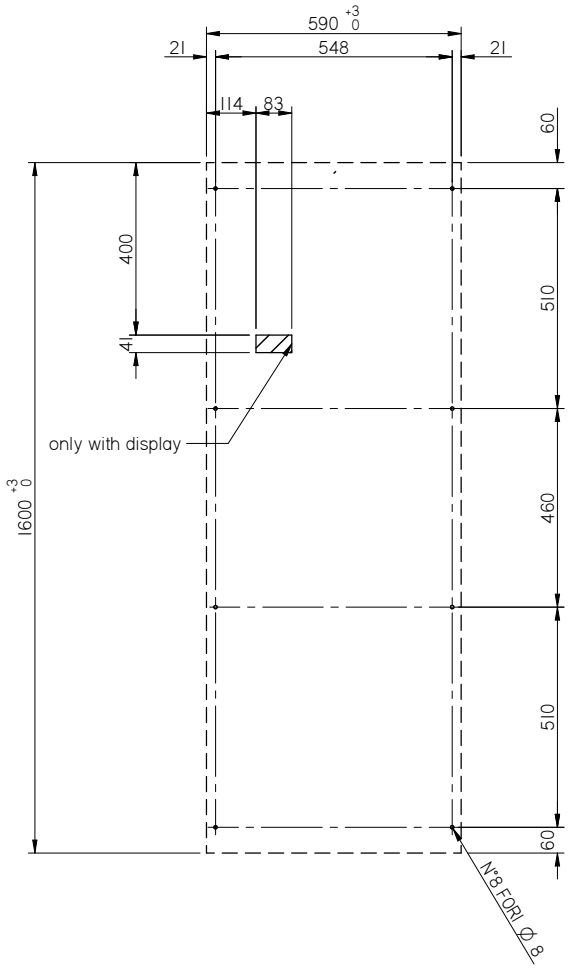

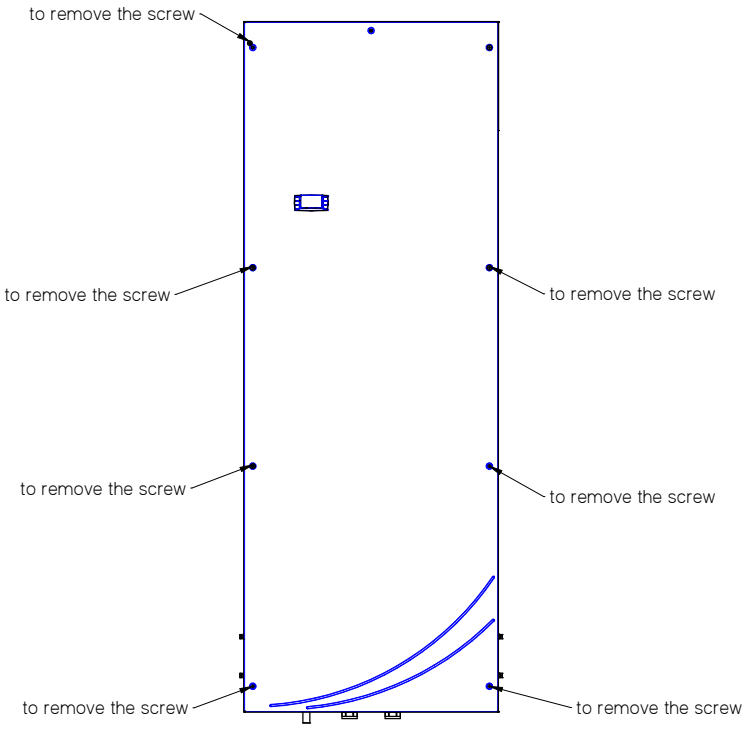

Cut-Out

Watherm CNW

CNW A0 ESTERNO

