Cut-Out

TOP ETE (R513A) ETY (R1234yf)

ETE/ETY 03

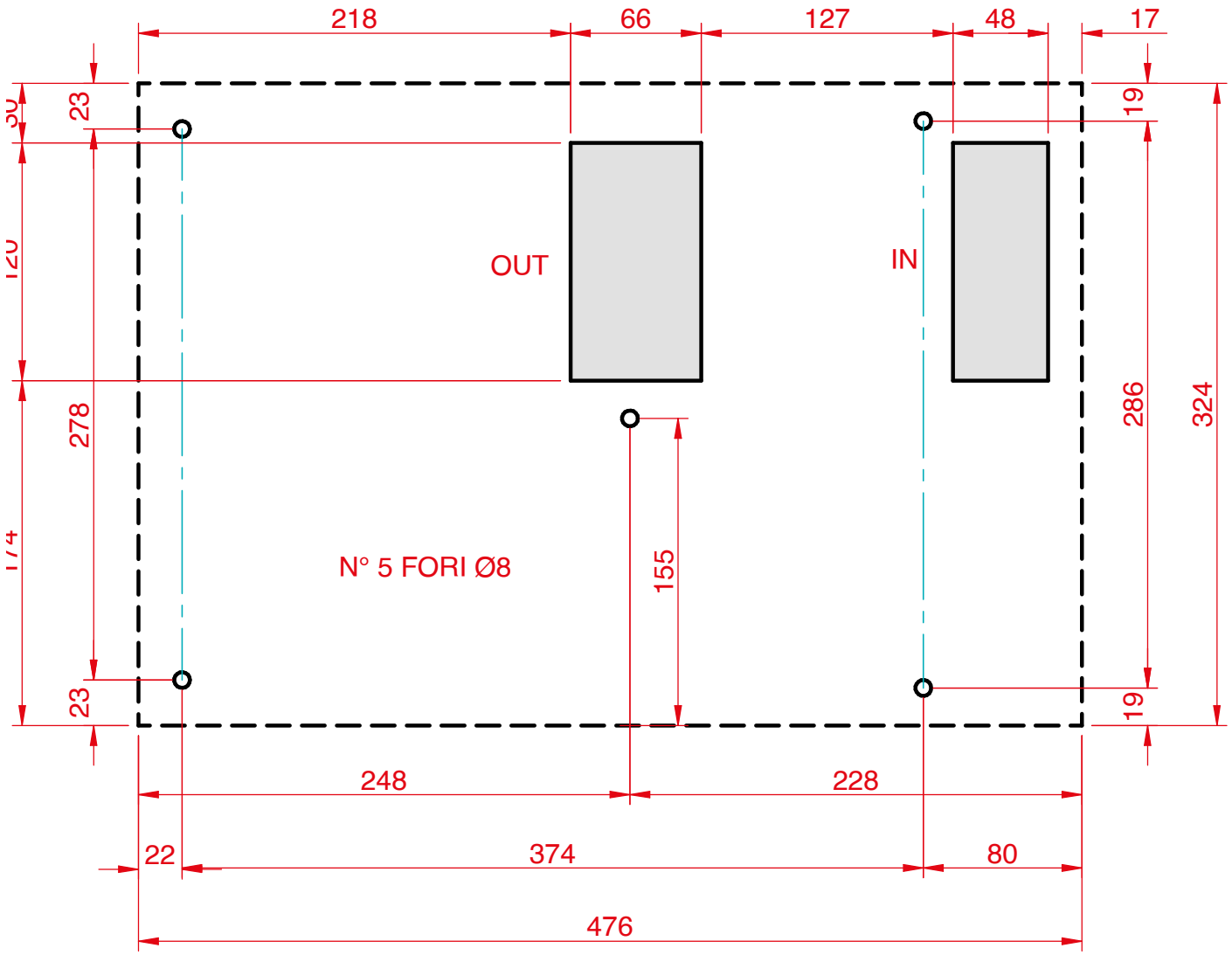

Cut-Out

TOP ETE (R513A) ETY (R1234yf)

ETE/ETY 06-09

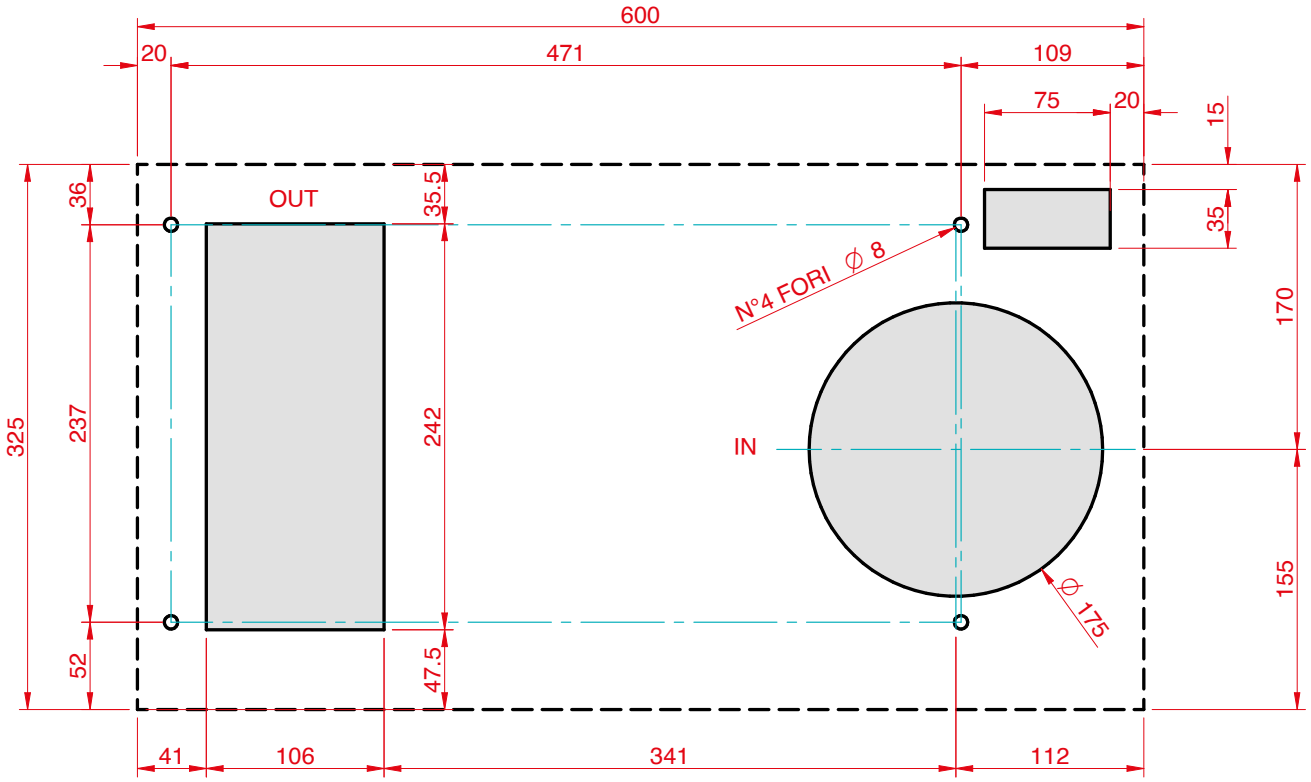

Cut-Out

TOP ETE (R513A) ETY (R1234yf)

ETE/ETY 14-20

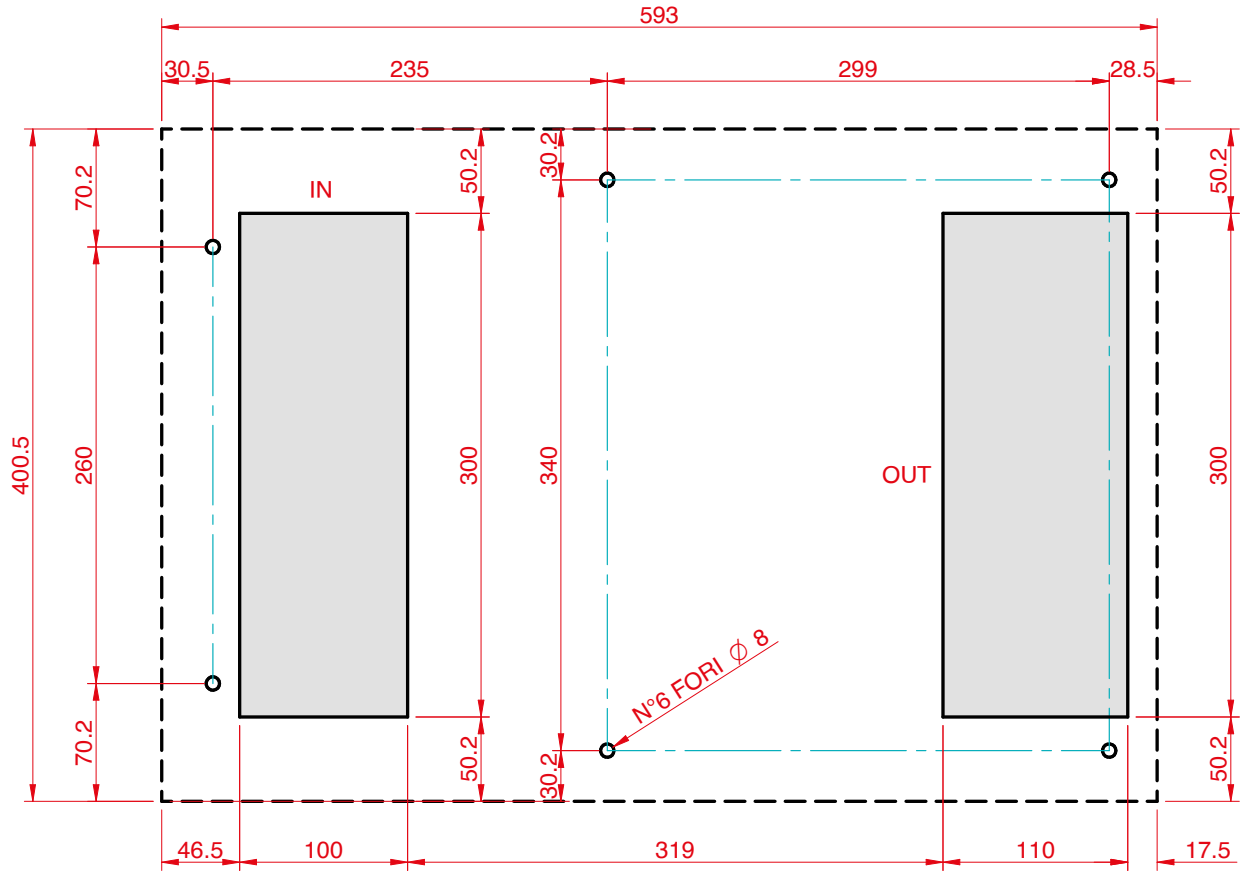

Cut-Out

TOP ETE (R513A) ETY (R1234yf)

ETE/ETY 28-41

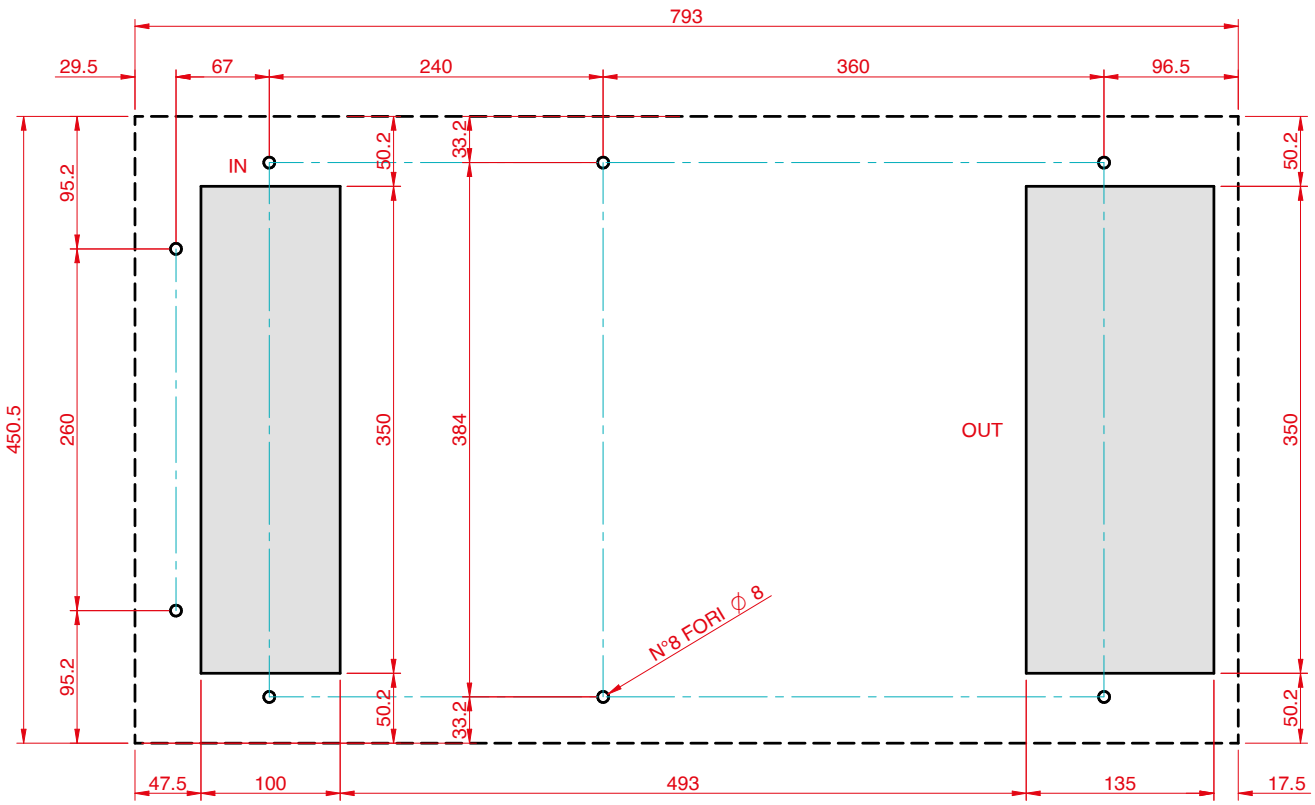

Cut-Out

TOP ETE (R513A) ETY (R1234yf)

ETE/ETY 60

