Rooftherm EXW

EXW 15H

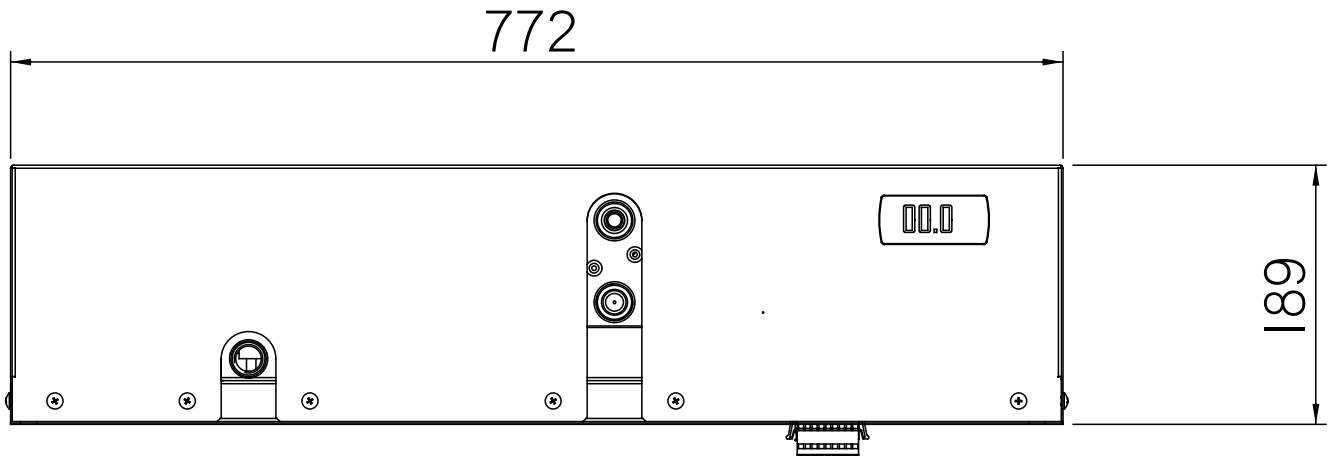

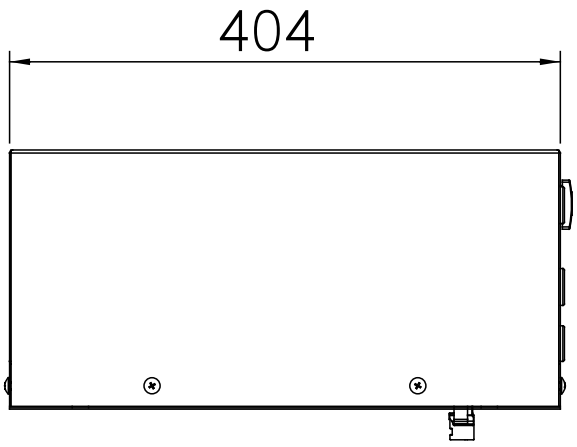

Rooftherm EXW

EXW 50H

