Aertherm XVA

XVA 16

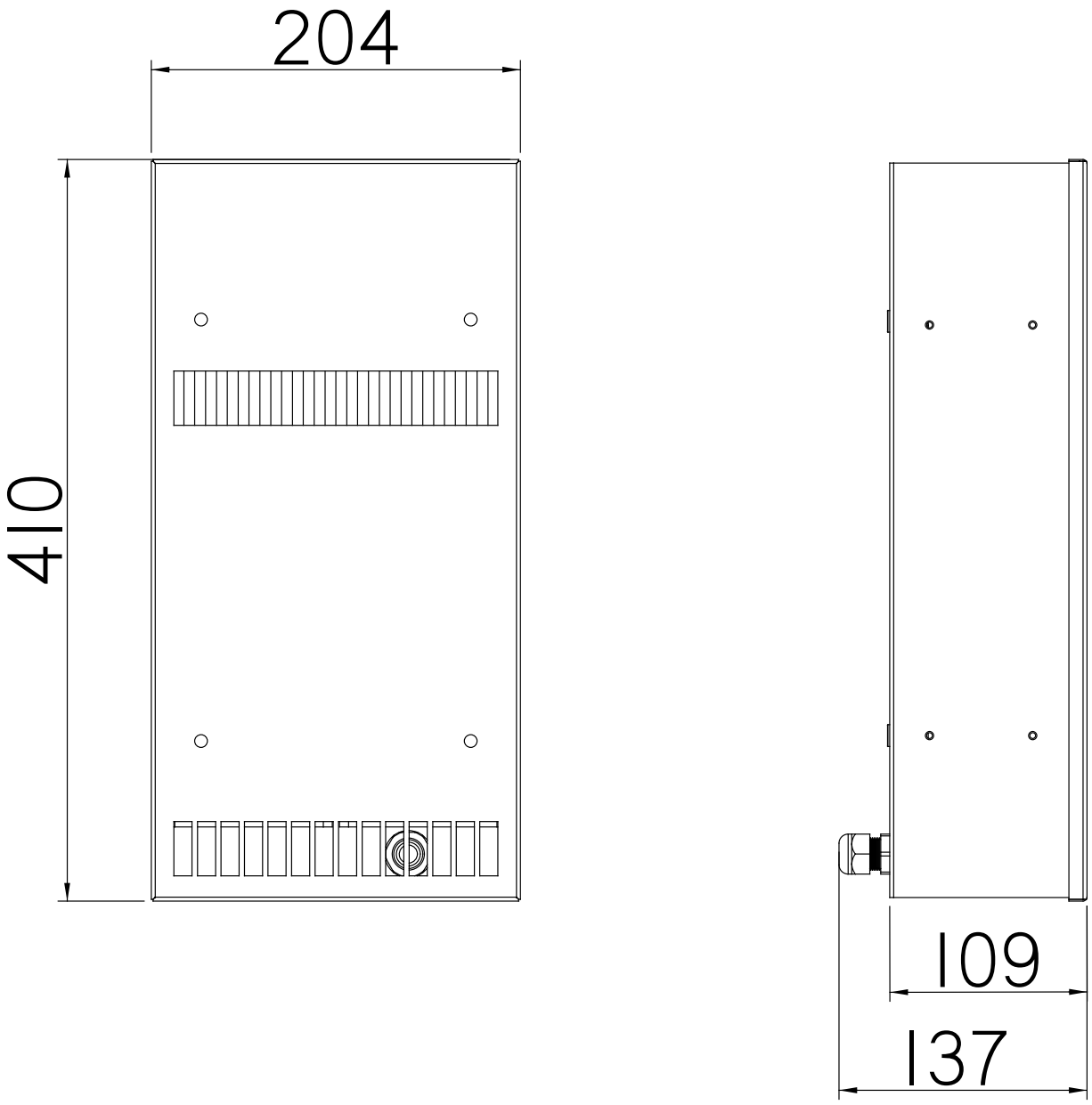

Aertherm XVA

XVA 35

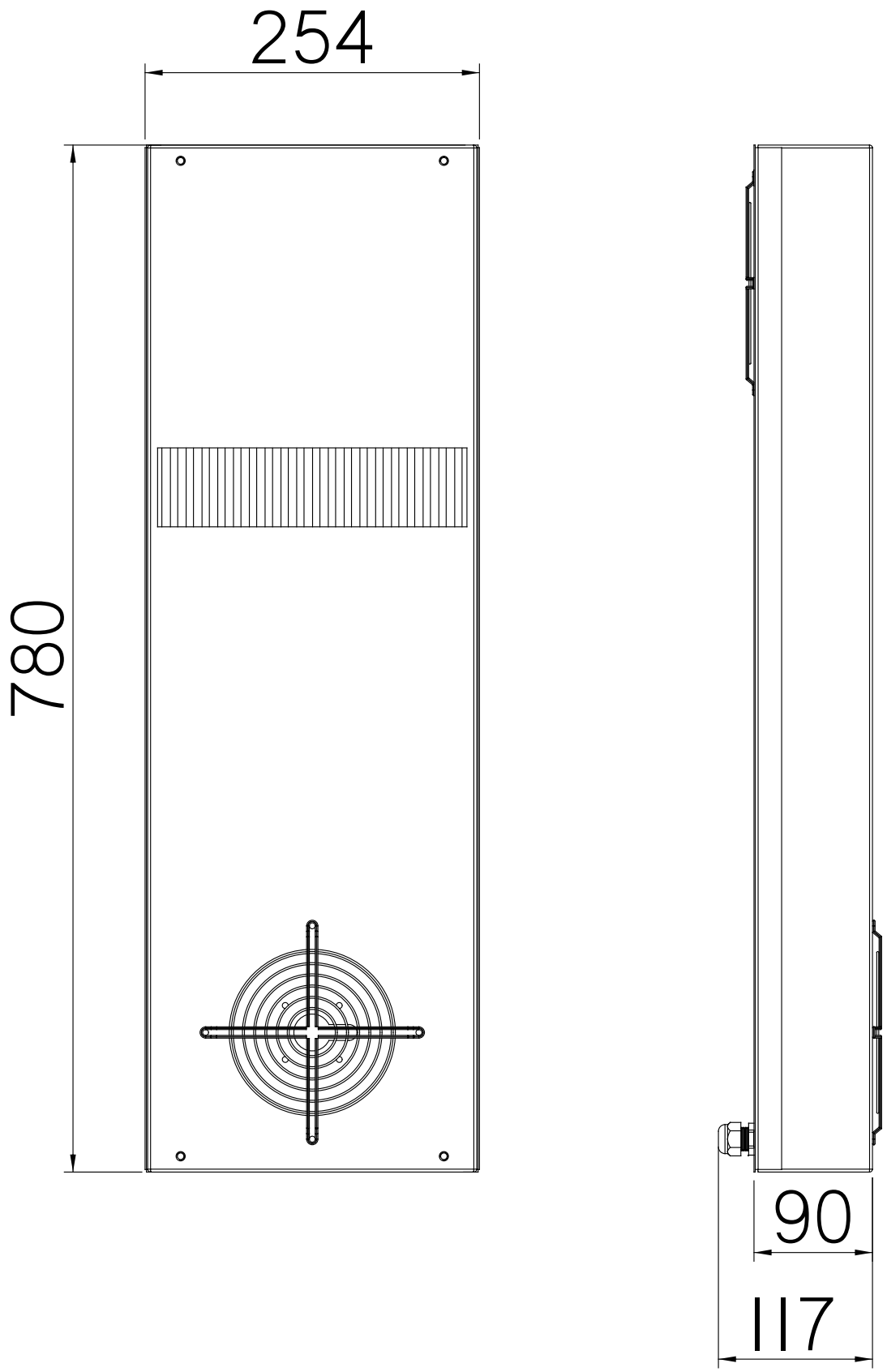

Aertherm XVA

XVA 50

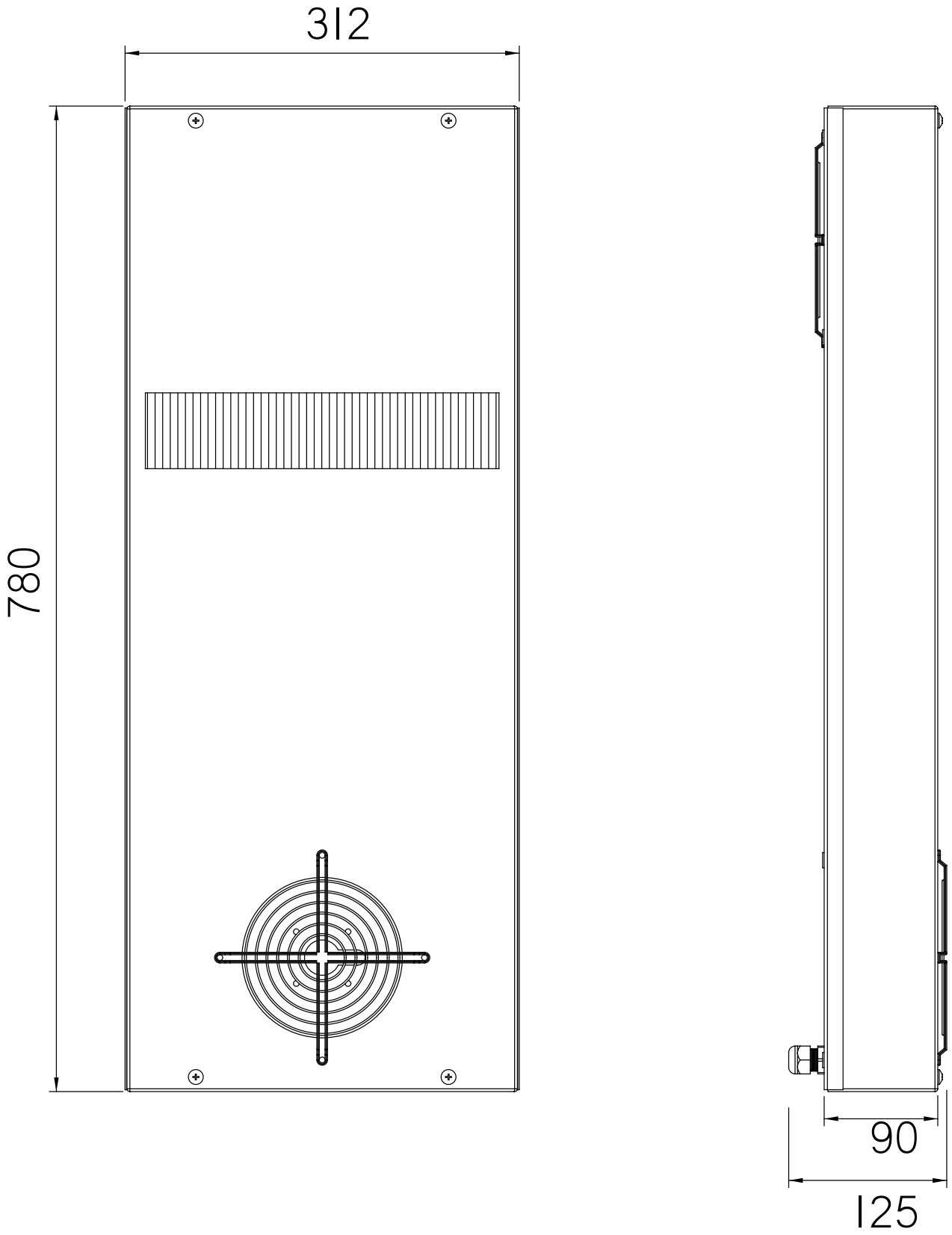

Aertherm XVA

XVA 80-90

